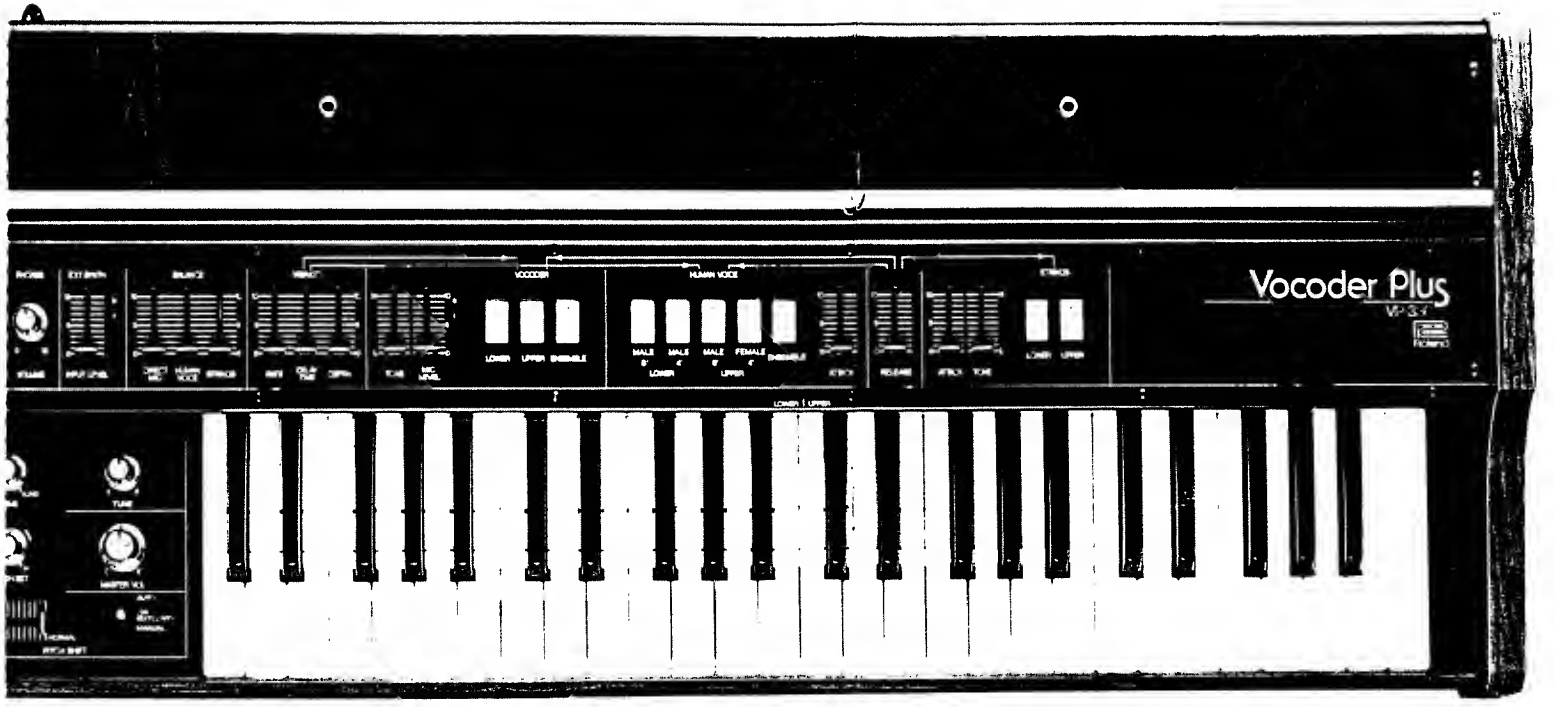

Vocoder Plus VP-330

OWNER'S MANUAL

The VP-330 Vocoder Plus is a keyboard vocoder designed particurlarly for live performance use. Besides the high quality vocoder circuits, the Vocoder Plus produces human voice and string sounds.

● FEATURES

- Clean, high quality vocoder sound.
- With the specially designed ensemble circuit, a single voice at the microphone input can sound like a large chorus.
- The vocoder closely follows the expression of the voice input.
- Red and green indicators for fast and easy setting of the microphone and external input levels.
- A hold function allows the quality of the sound to be held at any desired point.
- Includes synthesized human voice sounds.
- Includes refined string sounds.
- The keyboard is split so that the three sounds (vocoder, human voice, and strings) can be assigned freely to the upper and/or lower half of the keyboard.
- An external sound source may be used as the vocoder carrier input.

«Before Starting .....»

- Power supply indicated on the name plate must be used. In case that the power supply in your district is different from it, it must be adjusted, using the voltage regulator.
- Because it is operated by AC power this instrument may sometimes generate a little heat.

«Notes»

- Keep away from interferences that induce high levels of noise, such as flourescent lamps, neon lights and transformers as much as possible.
- Avoid the use of this instrument in places that are dusty, of high temperature or high humidity.
- Clean the control panel with neutral detergent. Use a soft, dry cloth for the wooden parts. Do not use solvents such as paint thinner.

Vocoder Plus
VP-330

●CONNECTIONS

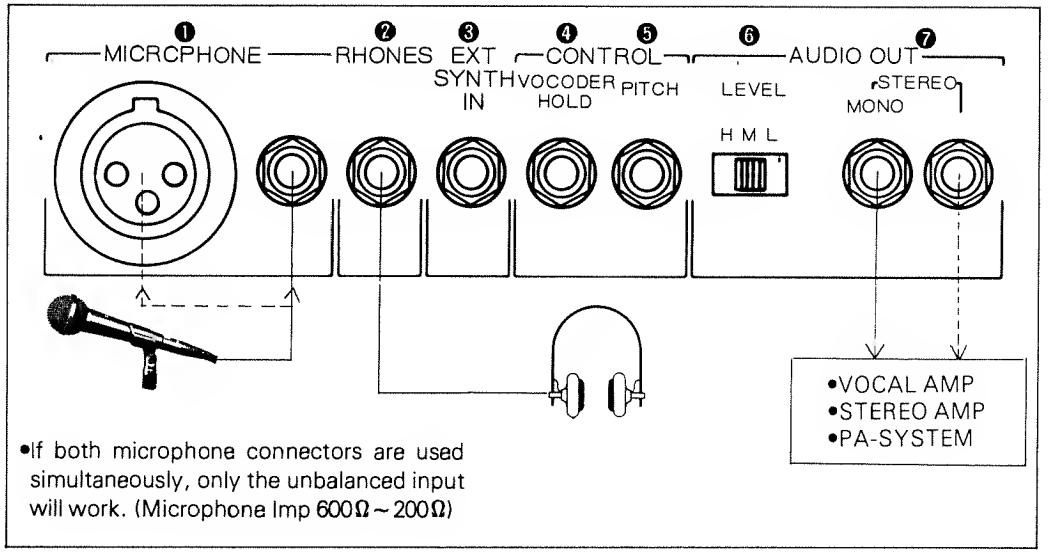

•If both microphone connectors are used simultaneously, only the unbalanced input will work. (Microphone Imp 600Ω ~ 200Ω)

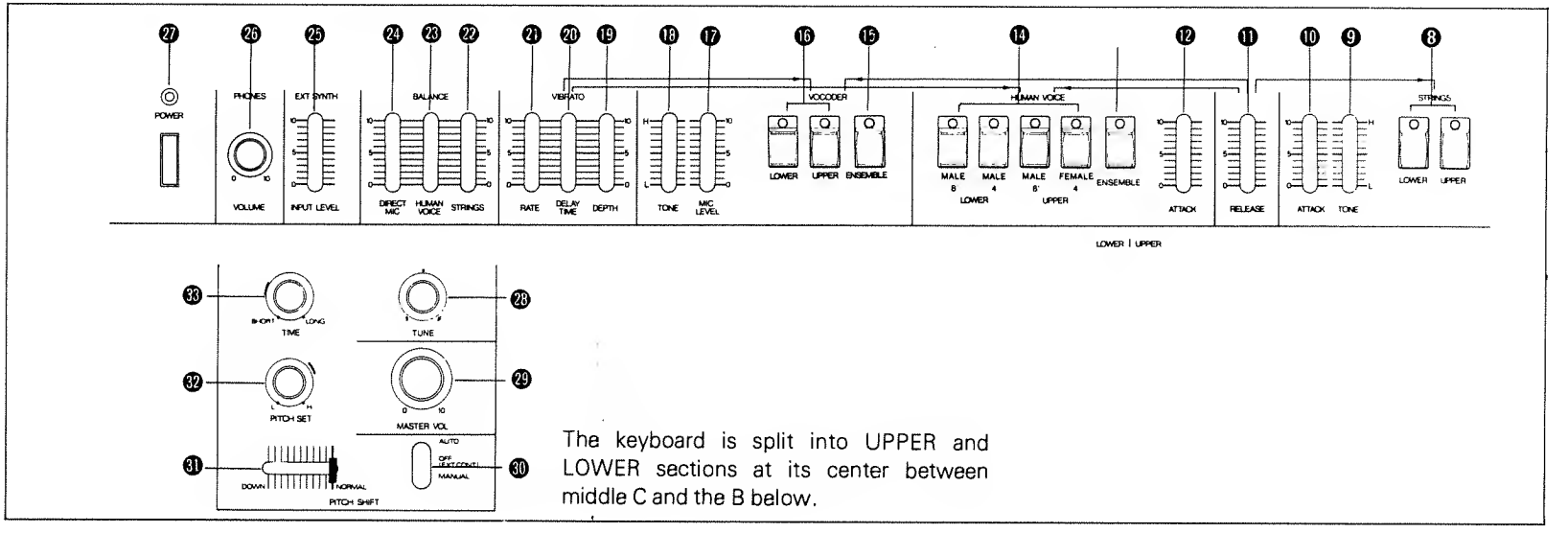

The keyboard is split into UPPER and LOWER sections at its center between middle C and the B below.

Turn on the POWER switch only after all connections have been made.

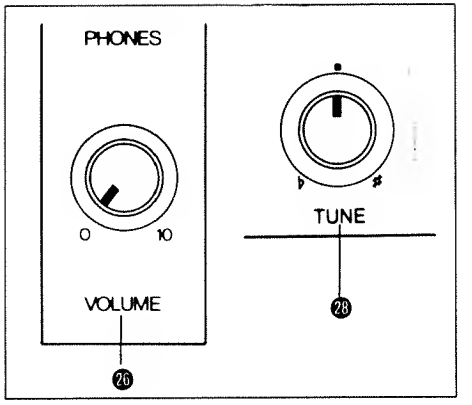

- PHONES VOLUME ㉖ - Controls volume completely independently of the MASTER VOLUME control ㉙
- TUNE Control ㉘ - For tuning the Vocoder Plus to other instruments.

●STRING ENSEMBLE

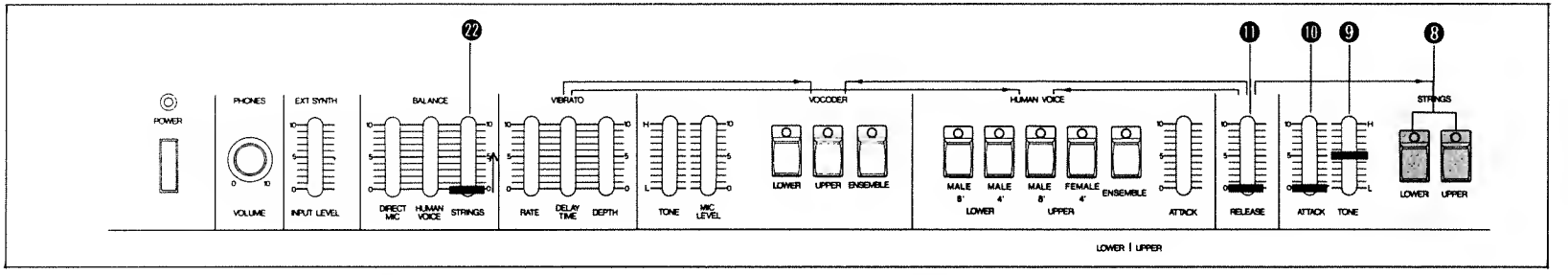

Press the STRINGS tablet ❽ON (when the LED is lit.) and raise the BALANCE section STRINGS slider ㉒. Turn the MASTER VOLUME control ㉙ (located to the left of the keyboard) up to a comfortable listening level while playing on the keyboard. This is the Vocoder Plus strings sound.

While playing try moving the TONE control ❾ up and down, then set it for the sound quality you like.

While playing, try the ATTACK control ❿ just to the left of the STRINGS tablets. Try both legato and non-legato playing. ATTACK controls the amoung of time required for the sound to reach full volume after pressing a key.

Return the ATTACK control ❿ to "O" and try raising the RELEASE control ⓫ while playing staccato notes on the keyboard. RELEASE controls the amount of time required for the sound to die away after releasing the keys.

● PITCH SHIFT

Fig. 2

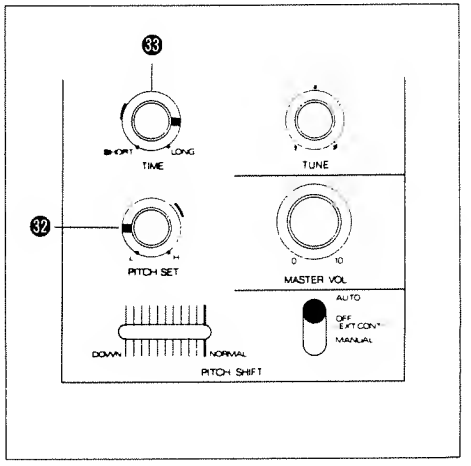

Fig. 3

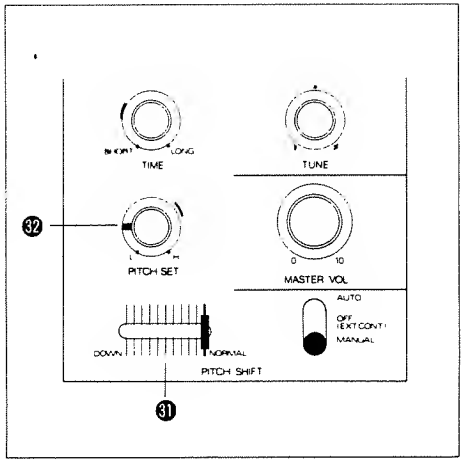

Fig. 4

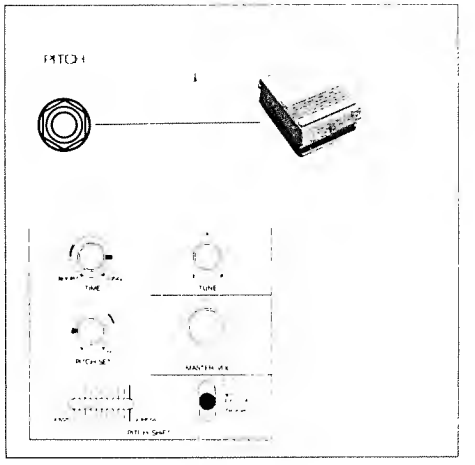

AUTO

Set the controls as shown in Fig. 2 and press a key on the keyboard. Note that the sound starts at some lower point, then slides up to the pitch of the key being pressed.
With the controls set as in Fig. 2, try turning the TIME control ㉝ while alternately pressing a key. Also try this while turning the PITCH SET control ㉜ . With these controls it is possible to adjust the time required for the pitch shift and also the starting pitch of the shift.

MANUAL

With the control set as in Fig. 3, try pressing a key and moving the PITCH SHIFT slider ㉛ to the left. With this control, you can manually shift the keyboard pitch downwards. The PITCH SET control ㉜ can be used to set the maximum range covered by the PITCH SHIFT slider ㉜ .

EXTERNAL CONTROL

When the controls are set as shown in Fig. 4, an external foot switch can be used to trigger the pitch shift function. The PITCH SET control ㉜ will determine the starting pitch of the shift and the TIME control ㉝ will determine the amount of time required for the pitch to return to normal after releasing the foot switch.
This pitch shift function works with all three sections: the vocoder, the human voice, and the strings section.

●HUMAN VOICE

Fig. 5

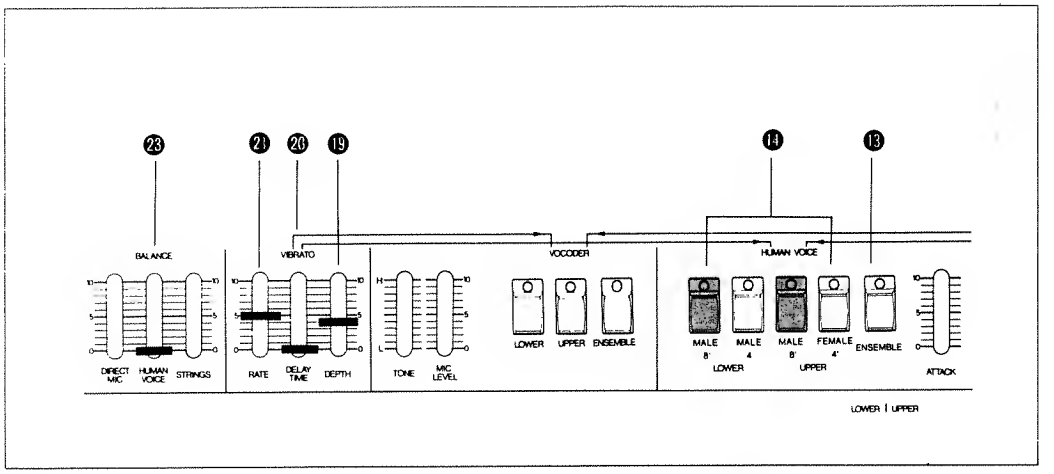

Turn on the switch shown in Fig. 5. Raise the HUMAN VOICE slider ㉓ in the BALANCE section and try playing the keyboard. This is the human voice sound.

Like the strings section, the human voice section also has variable ATTACK ⑫ and RELEASE ⑪ , as well as pitch shift.

- Ensemble - Pushing the ENSEMBLE switch ⑬ broadens the human voice sound for a chorus-like effect.
- Vibrato - Set the controls as shown in Fig. 5 and press a key to produce the vibrato effect. While playing the keyboard, try moving the RATE ㉑ and DEPTH ⑲ controls up and down and note the effect on the sound.

Next, try raising the DELAY TIME control ⑳ and pressing a key on the keyboard. Now there is a slight delay between the pressing of the key and the entry of the vibrato effect. This DELAY TIME control ⑳ controls the amount of delay.

The vibrato effect also works for the vocoder section.

●USING THE HUMAN VOICE SECTION

The effective use of the human voice sounds depends on the settings of the voice switches, ensemble switch ⑬, vibrato controls, the ATTACK ⑫ and RELEASE ⑪ controls, and the pitch shift controls.

Select the desired voice quality for the UPPER and LOWER portions of the keyboard. Use the delayed vibrato for solo effects and use the ENSEMBLE switch ⑬ for chorus effects.

Fig. 7 shows how to produce realistic human voice sounds using the pitch shift. Try varying the settings from those shown to produce other effects.

Fig. 7

●VOCODER

Fig. 8

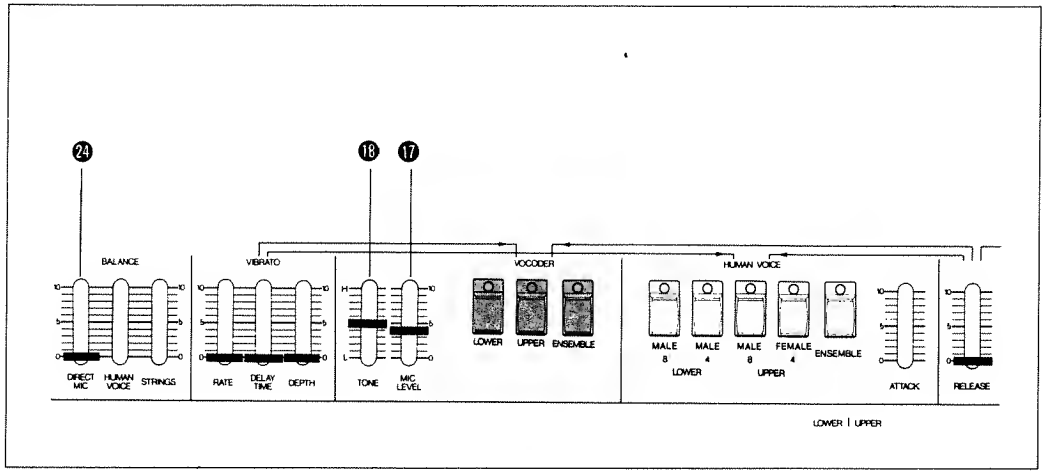

Set the controls as shown in Fig. 8 and try playing the keyboard. In this condition, there is no sound. Now, try speaking or singing into the microphone while pressing a key. Now the vocoder will produce your words, but with the tone color of the built-in sound source.

Set the MIC LEVEL control ⑰ so that when speaking or singing into the microphone, the red LED lights only rarely. Set the TONE slider ⑱ at the point that produces the tone quality you like.

Vibrato, pitch shift, and release can also be used with the Vocoder section.

Note that when using the RELEASE control, you will need to continue speaking into the microphone even after releasing the keys on the keyboard.

If you want to mix part of the original microphone sound into the vocoder sound, raise the DIRECT MIC control ㉔

Fig. 9

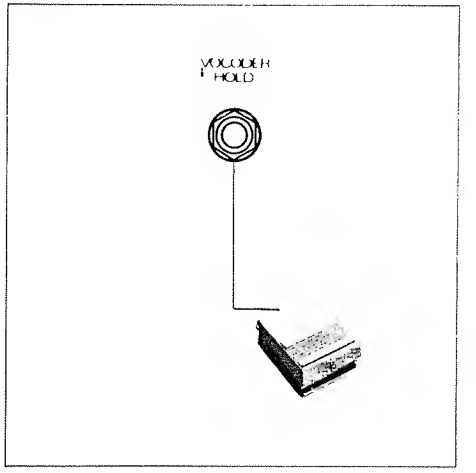

Fig. 9 shows how to use a foot switch for holding the vocoder sound. The sound which is being produced at the instant the foot switch is being pressed will be held as long as the foot switch remains depressed.

●HOW THE VOCODER WORKS

The vocoder has two inputs: the program input and the carrier input. The program input often consists of spoken or sung words which are input through a microphone. The carrier consists of either the built-in synthesizing equipment or a synthesizer signal from an external source. The program, or voice input is analyzed by passing it through a set of filters to determine what the harmonic content of the sound is and how it changes as the sound progresses. For example, the sound "oo" usually consists of primarily low frequencies while the sound "ee" usually consists of higher frequencies. The result of this analysis is a group of control voltages which are used to control the synthesizer portion of the vocoder. Each of these control voltages controls the output level of a second series of filters. This series of filters controls the tone color of the program of synthesizer portion of the vocoder. With the sound "ee", then, the control voltages which represent higher frequencies will be at a higher level than those control voltages representing lower frequencies thus opening partially or completely those synthesizer filters associated with the higher frequency bands. The synthesizer sound output will seem to "speak" or "pronounce" the sound "ee".
The program or microphone input is broken down and analyzed to determine its frequency content at any given instant, then reassembled in the synthesizer protion of the vocoder using the synthesizer sound as its basic source of building material. In this way the carrier or synthesizer input is continuously processed so that it seems to speak or sing the words which appear at the program or microphone input.

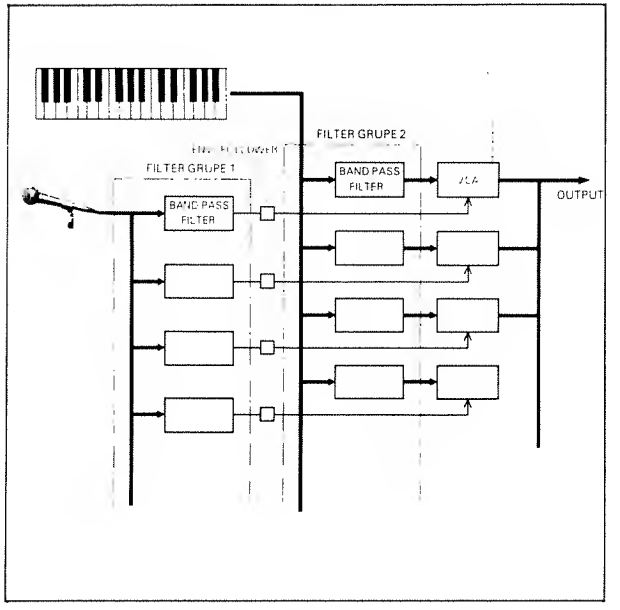

●HOW TO USE THE VOCODER

Since the vocoder produces sound by analyzing the microphone input and using this analysis to control the synthesizer input, it becomes obvious that the vocoder cannot produce sound if either one of these inputs is missing. This means that it becomes very important for the words spoken or sung into the microphone to be well-synchronized with the notes or phrases played on the keyboard. Also, if the RELEASE control is used, the vocal input must be contained for a short space after the keys have been released.
Since the pitch of the vocoder output sound is determined by the synthesizer input rather that the vocal input, it is possible to use pitch related effects such as vibrato and pitch bend to enhance the sound.
If the vocoder output sound is combined with the direct sound by raising the DIRECT MIC ㉔ control in the BALANCE section, it is possible to produce duet effects by singing pitches which are different from those being played on the keyboard.

CONBINING SOUNDS

The various sounds produced by the Vocoder Plus can be combined in many different ways to produce a wide variety of effects and sounds. The possibilities can be further increased by means of the split keyboard by assigning sounds to its upper and lower portions.

EXTERNAL SYNTHESIZER

Fig. 10

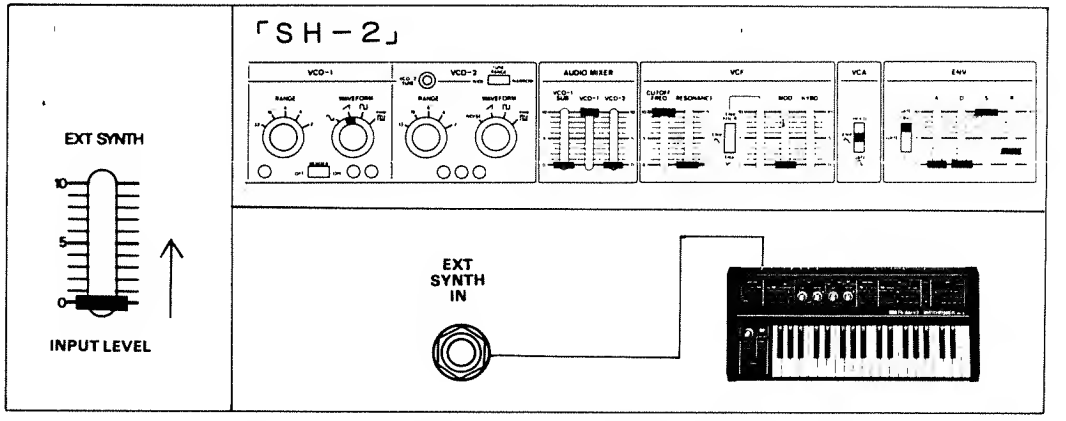

Set the external synthesizer as shown in Fig. 10 and raise the EXT SYNTH INPUT LEVEL so that playing on the external synthesizer causes the green LED to light but rarely causes the red LED to light. Sound is produced by playing on the external synthsizer and speaking or singing into the microphone.

•The dynamic level (loudness and softness) of the vocoder sound is controlled by the dynamic level of the voice input to the microphone.

CAUTION

Since the synthesizer portion of the vocoder becomes the source of raw material from which the analyzed voice input is re-assembled, it is important that this source contain enough material from which to build the new sound. When using an external synthesizer, keep the following points in mind:

VCO: Use a waveform output which is rich in harmonics rich as the sawtooth wave or a pulse wave with a short duty cycle (10%, for example).

VCF: The cutoff frequency control should be kept relatively high so that the output sound of the synthesizer retains a relatively high harmonic content.

ADSR: It will usually prove better to raise the envelope generator SUSTAIN control to maximum and leave the other controls at minimum so that the synthesizer keyboard merely becomes an ON/OFF gate for the output sound of the synthesizer.

●SPECIFICATIONS

Keyboard (49 keys, C-C)

STRINGS Section
- STRINGS Tablets ⑧
  - UPPER Strings 4'
  - LOWER Strings 4'
- ATTACK control ⑩
- TONE control ⑨

RELEASE Control ⑪
(for strings, human voice, vocoder)

HUMAN VOICE Section
- VOICE Tablets ⑭
  - FEMALE 4' } UPPER
  - MALE 8' }
  - MALE 4' } LOWER
  - MALE 8' }
- ENSEMBLE Tablet ⑬
- ATTACK Time control ⑫

VOCODER Section
- VOCODER Tablets ⑯
  - UPPER 8'
  - LOWER 8'
- ENSEMBLE Tablet ⑮
- TONE Control ⑱
- MIC LEVEL Control ⑰
- Mic Level Indicator

Vibrato (Human voice, vocoder)
- DEPTH Control ⑲
- DELAY TIME Control ⑳
- RATE Control ㉑

BALANCE Section
- STRINGS Level ㉒
- HUMAN VOICE Level ㉓
- DIRECT MIC Level ㉔

EXTERNAL SYNTHESIZER Section
- INPUT LEVEL Control ㉕
- Input Level Indicator

HEADPHONE VOLUME Control ㉖

MASTER VOLUME Control ㉙

TUNING Control ㉘ (±50 cents)

PITCH SHIFT Section
- PITCH SHIFT Slider ㉛
- PITCH SET Control ㉜ (more than one octave)
- TIME Control ㉝
- PITCH MODE Switch ㉚
  - AUTO; OFF (EXT CONT); MANUAL

POWER Switch ㉗ with indicator

CONNECTORS (1/4" phone jacks except as noted)
- AUDIO OUTPUTS ❼
  - MONO, STEREO
  - OUTPUT LEVEL Switch ❻
    - H: 0dBm, 6,3kΩ
    - M: −15dBm, 8.6kΩ
    - L: −30dBm, 2.2kΩ
      (0dBm = 0.775V RMS, max. 10V p-p)
- MICROPHONE INPUTS ❶
  - Unbalanced (Imp: 3kΩ)
  - Unbalanced (XLR connector)
- HEADPHONE OUTPUT ❷ (Stereo)
- EXTERNAL SYNTHESIZER INPUT ❸
- EXTERNAL CONTROL INPUTS (for DP-2 Pedal Switch)
  - VOCODER HOLD ❹
  - PITCH SHIFT ❺

Power Consumption: 26W
Dimensions: 905(w) x 370(d) x 145(h) mm
Weight: 14kg
Accessories: 2.5meter connection cord (x2)
DP-2 Pedal Switch
Music Stand

Specifications subject to change without notice.

● OPTINAL ACCESSORIES

● PEDAL SWITCH DP-2

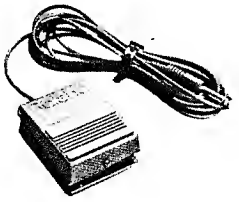

● MICROPHONE DR-200

● HEADPHONE RH-2

● MICROPHONE STAND ST-100

Roland Corporation

Roland®

10280

UPC 10280

10981

Roland®